Distinguished Lecturer Tour
India, November 2004

Towards Automatically Switched Optical Networks (ASON)

Andrzej Jajszczyk

Department of Telecommunications
AGH University of Science and Technology
Kraków, Poland
e-mail: jajszczyk@kt.agh.edu.pl

IEEE COMMUNICATIONS SOCIETY

Outline

- Limitations of existing networks
- Control plane benefits
- Definition of ASON
- ASON transport plane
- ASON control plane
- ASON management plane
- Implementation issues
- Open issues and perspectives

Limitations of Existing Optical Networks

- Manual provisioning
- Long provisioning times
- Inefficient resource utilization
- Problems in interworking between packet switched client networks and circuit switched optical networks
- Complex network management systems
- Interoperability problems between networks belonging to different carriers
- Problems in implementation of protection schemes in mesh networks

Pre ASON Network

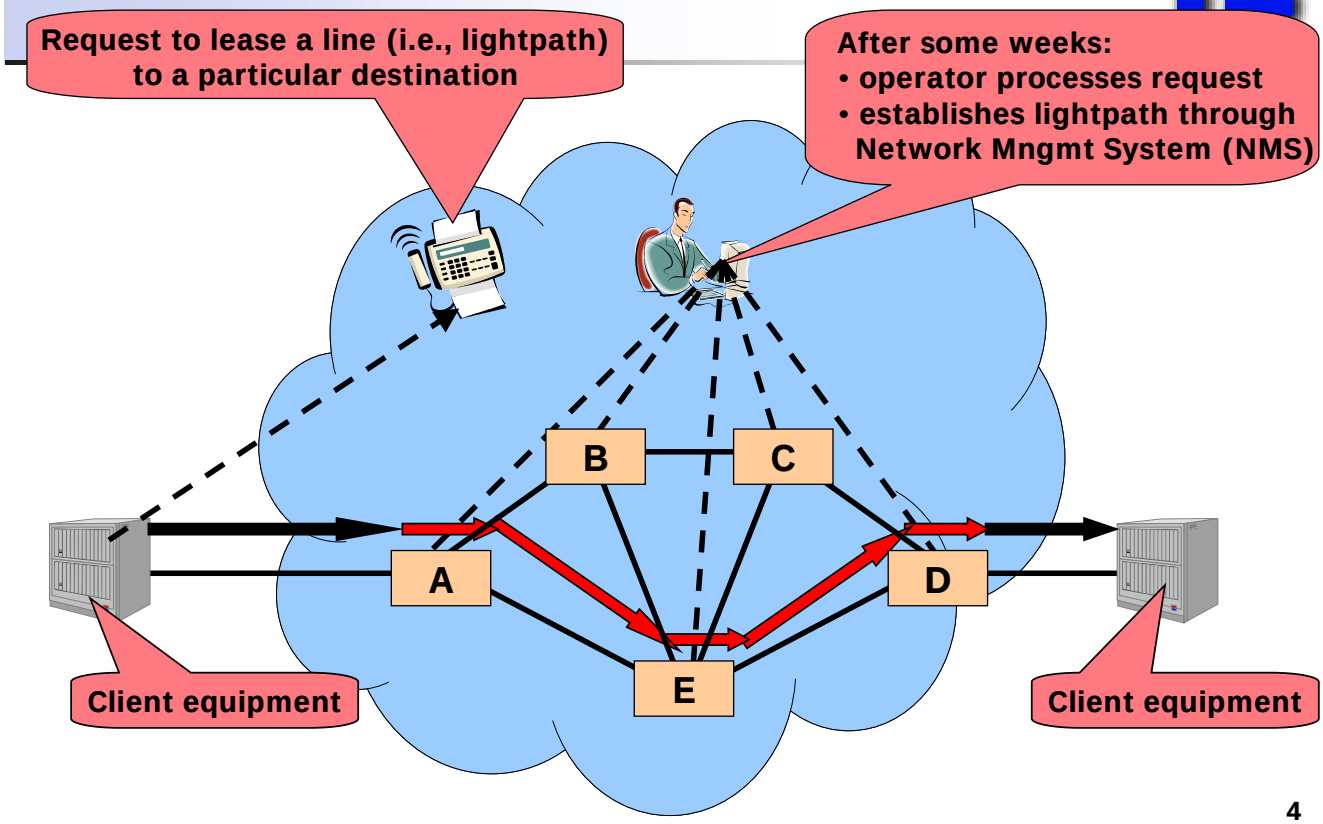

Major Features of Networks Containing a Control Plane

- Fast provisioning
- New services
- Easier (cheaper) network operation
  - Reduction of manual intervention
  - Simplification of network management systems
- Higher network reliability
- Better resource utilization
- Easier internetworking

Fast Provisioning

- Provisioning of optical channels in minutes
- Linking optical network resources to data traffic patterns automatically
- Reduction of manual intervention
- Semi-automatic configuration of network elements
- Compensation of the small reserve by optimal traffic routing
- Rapid set-up over borders of operator domains, without the need to agree on interdomain management interfaces

Example of Fast Provisioning

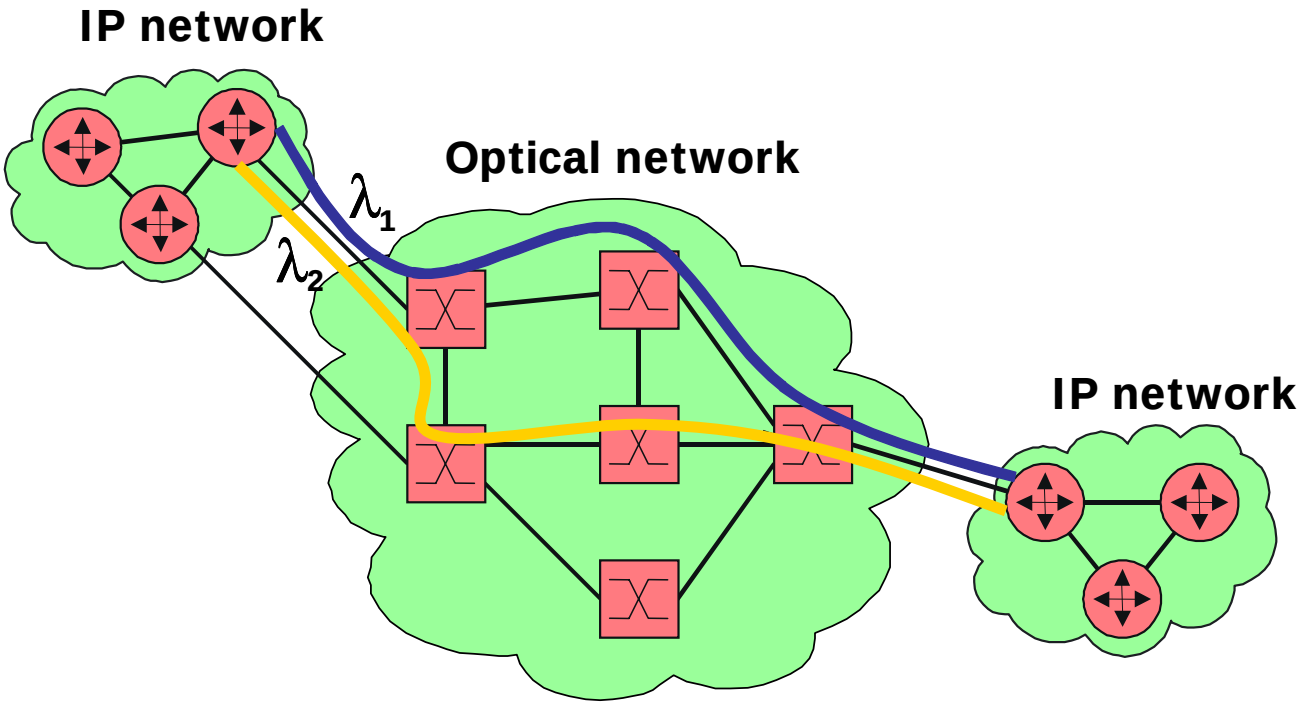

New Services

- Differentiated private line SLAs
  - Bit error rate
  - Availability
  - Security
- Virtual private networks and closed user groups
- Traffic engineering enabled services
- Bandwidth on demand
  - Long-term coarse grained pipes for average steady state bandwidth
  - Short-term finer grained pipes for hitless bandwidth adjustment
  - Use of high capacity for overnight back-ups between plants

Easier (Cheaper) Network Operation

- **Reduced operations cost**
  - Reuse of control plane protocols
  - Common terminology
  - Interface integration across layers
  - Packet network and circuit network integration
- **Improved network utilization**
  - Shared protection paths using mesh architectures
  - Opportunity for concentration
  - Reactive traffic engineering (allows the network resources to be automatically allocated to routes)

Example of Fault Recovery

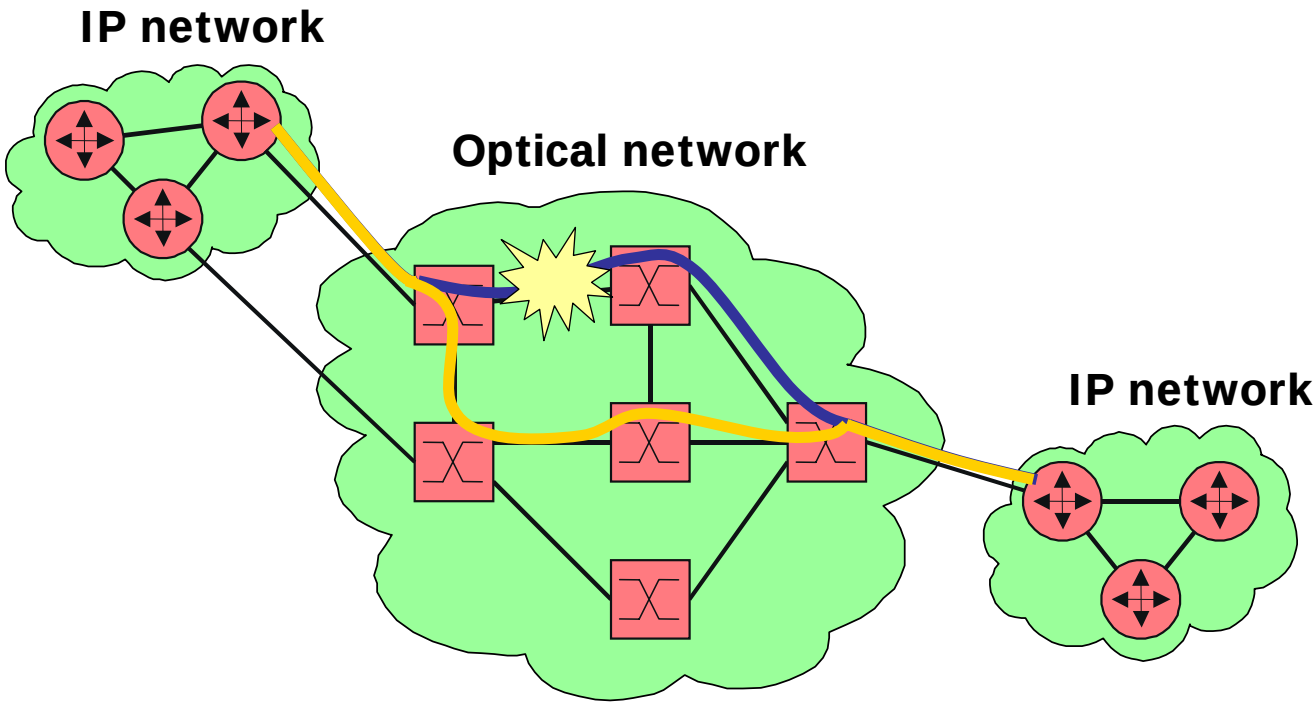

Example: Permanent Connections

Assumptions:

- 40 bank headquarters (BH) in a business capital
- On average, 4 branch offices (BO) per bank in another city
- 5000 user accounts per BO
- 2 Mb of data associated with a single account is transferred every day within 3 hours after bank closing

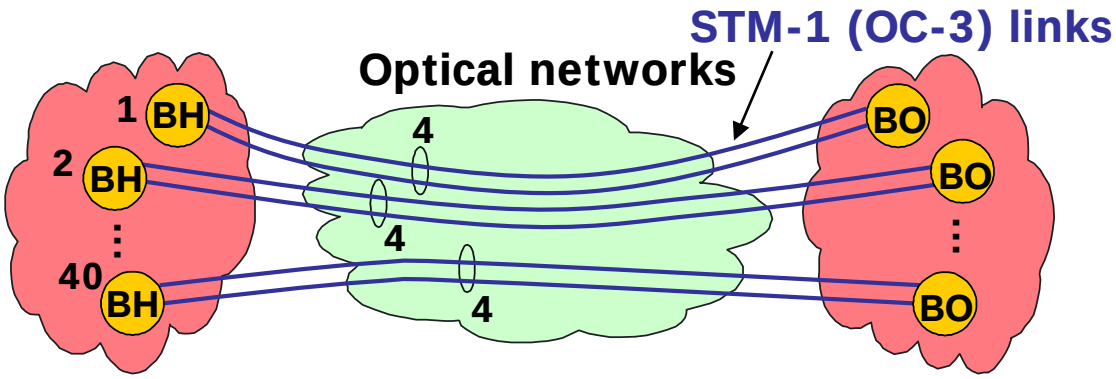

Example: Switched Connections

Calculation of the number of switched lines:

- **Mean holding time:**
  $h = (5000 \times 2)/155 \approx 65.5$ s
- **Mean interarrival time:**
  $t = 3/(40 \times 4) = 67.5$ s
- **Average traffic intensity between the two cities:**
  $A = h/t \approx 0.96$ erlangs
- **By using the Erlang-B formula, and assuming the allowable probability of blocking of 0.002, the number of STM-1 links needed to carry the whole traffic is equal to 6**

Example: Switched Connections, cont.

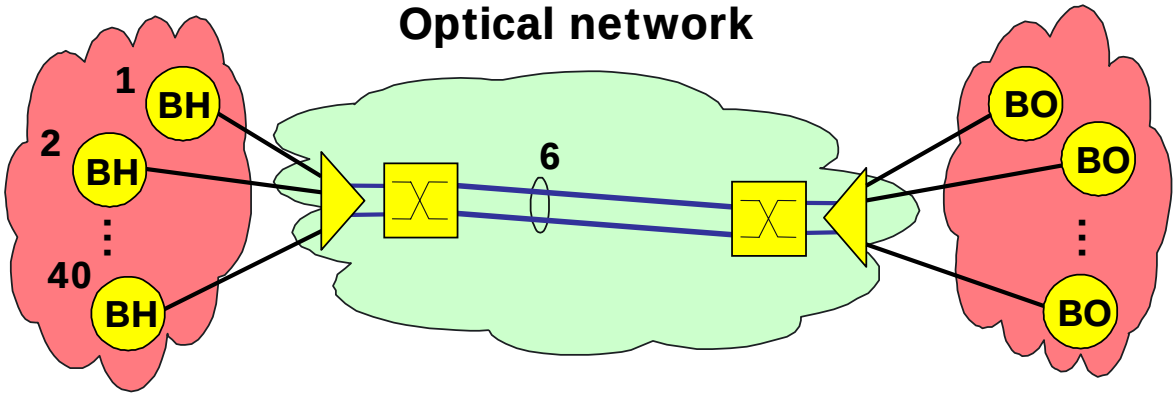

- Therefore, the savings ratio: 160 / 6 ≈ 27

Definition of ASON

- Limitations of existing networks
- Control plane benefits
- *Definition of ASON*
- ASON transport plane
- ASON control plane
- ASON management plane
- Implementation issues
- Open issues and perspectives

Definition of ASON

- **Automatically switched optical network (ASON) is an optical transport network that has dynamic connection capability**
- **ASON enables:**
  - **Improved support for end-to-end provisioning, re-routing and restoration**
  - **New transport services, such as: bandwidth on demand, rapid service restoration for disaster recovery, switched connections within a private network, etc.**
  - **Support for a wide range client signals, e.g.: SDH/SONET, IP, ATM, Ethernet, Frame Relay.**

Definition of ASTN

- **Automatic switched transport network (ASTN) is a transport network where configuration connection management is implemented by means of a control plane (G.807)**
- **ASTN is technology independent (ASON is associated with optical networks)**
- **ASON is part of more generic ASTN**

ASON Topological Components

- Transport Plane: Network Elements
  - Provide cross-connect capabilities
  - Either existing technologies (SDH/SONET) or new ones (OTN)
- Control Plane: Optical Connection Controller
  - Provides routing, signalling, topology discovery and connection control
- Management Plane: Network Management System
  - Interworking with existing NMSs
  - First use will likely be provisioning of soft-permanent network connections within a single-operator domain

Supported Connections

- Three kinds of optical connections are supported:
  - Permanent: set up from the management system with network management protocols
  - Soft permanent: set up from the management system which uses network generated signalling and routing protocols to establish connections
  - Switched: set up by a customer on demand by means of signalling and routing protocols

Permanent (Provisioned) Connection

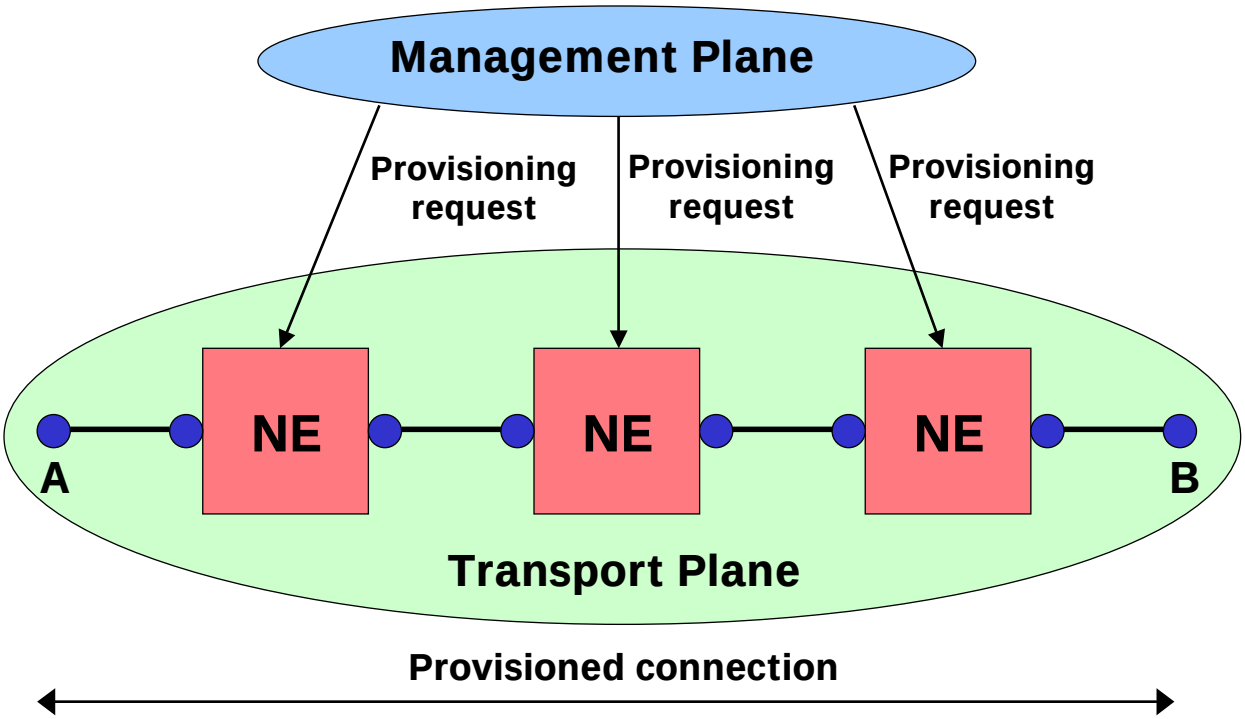

Switched (Signalled) Connection

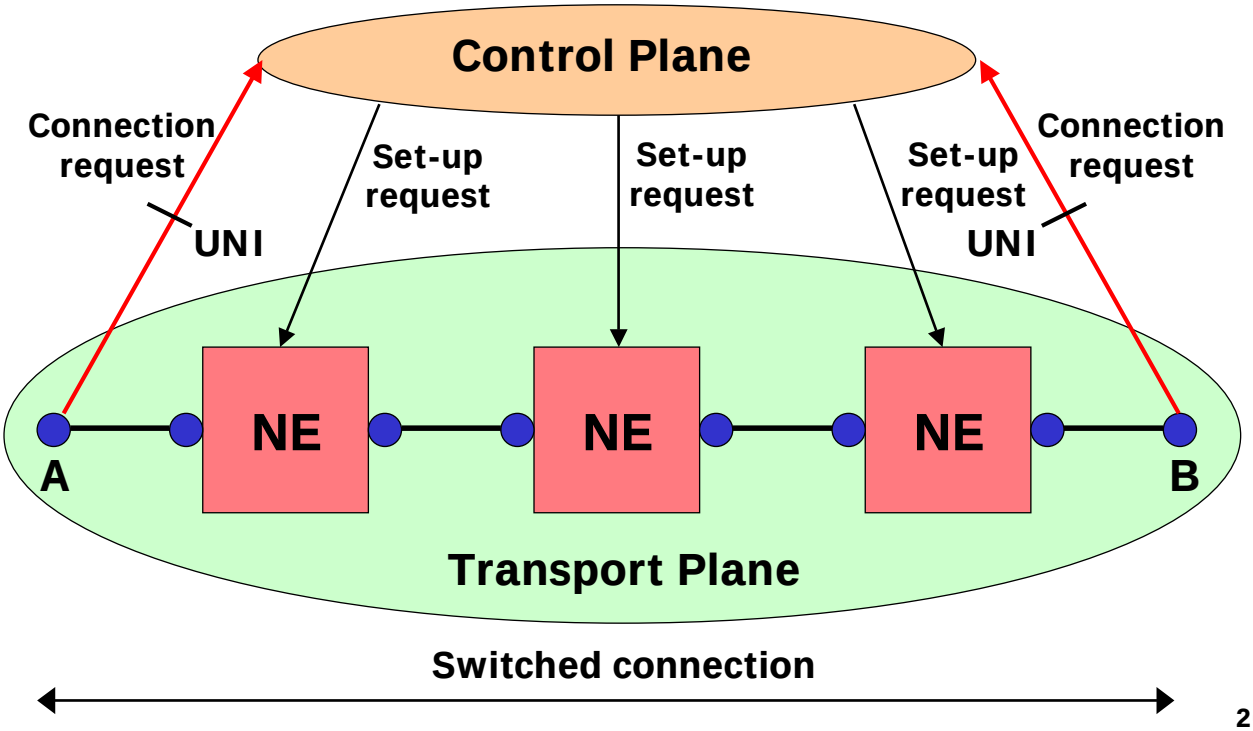

Soft Permanent (Hybrid) Connection

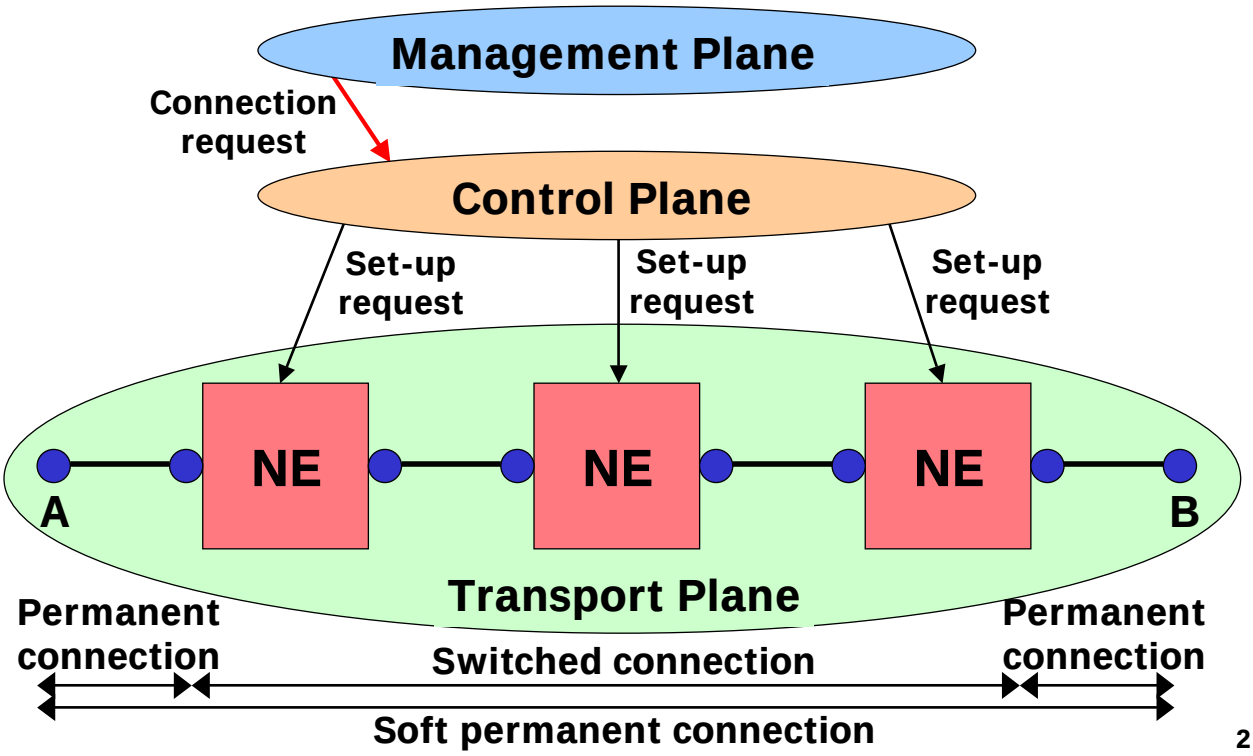

ASON Transport Plane

- Limitations of existing networks
- Control plane benefits
- Definition of ASON
- *ASON transport plane*
- ASON control plane
- ASON management plane
- Implementation issues
- Open issues and perspectives

Optical Transport Network (OTN)

- **Optical Transport Network**
  - **Provides functionality of transport, multiplexing, routing, management, supervision and survivability of optical channels carrying client signals**
  - **A distinguishing characteristic of the OTN is its provision of transport for any digital signal independent of client-specific aspects, i.e. client independence**

OTN Layered Structure

- **Optical channel layer network**
  Provides end-to-end networking of optical channels for transparently conveying client information of varying format
- **Optical multiplex section layer network**
  Provides functionality for networking of a multi-wavelength optical signal
- **Optical transmission section layer network**
  Provides functionality for transmission of optical signals on optical media of various types
- **Physical media layer network**
  It is a defined optical fibre type

G.709/Y.1331 – Structure of the OTN Interfaces

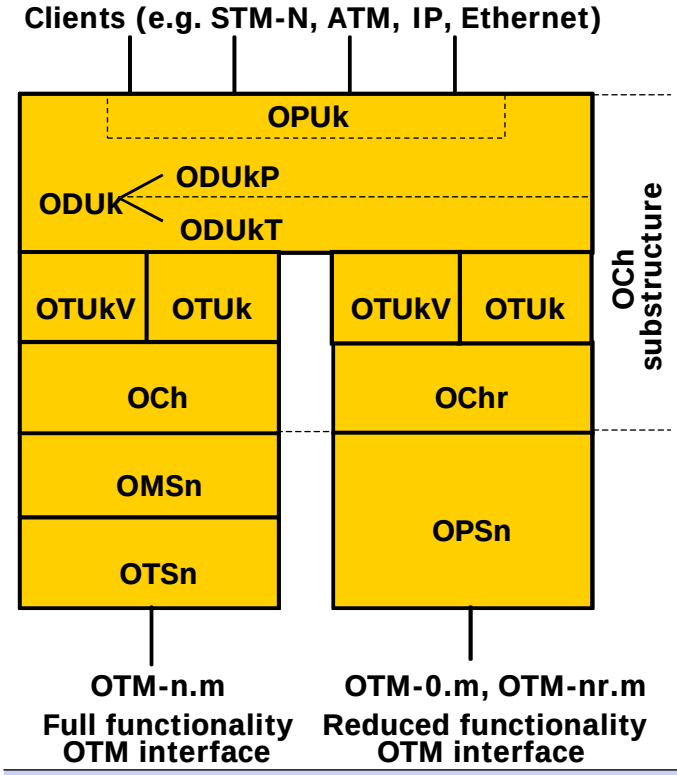

OPU	Optical Channel Payload Unit
OPUk	Optical Channel Payload Unit-k
ODU	Optical Channel Data Unit
ODUk	Optical Channel Data Unit-k
OTUk	completely standardized Optical Channel Transport Unit-k
OTUkV	functionally standardized
Optical	Channel Transport Unit-k
OCh	Optical channel with full functionality
OChr	Optical channel with reduced functionality
OMS	Optical Multiplex Section
OPS	Optical Physical Section
OTS	Optical Transmission Section

ODUk provides:
tandem connection monitoring (ODUkT);
end-to-end path supervision (ODUkP);
adaptation of client signals via the Optical Channel Payload Unit (OPUk).

OTM-*n* Containment Relationships

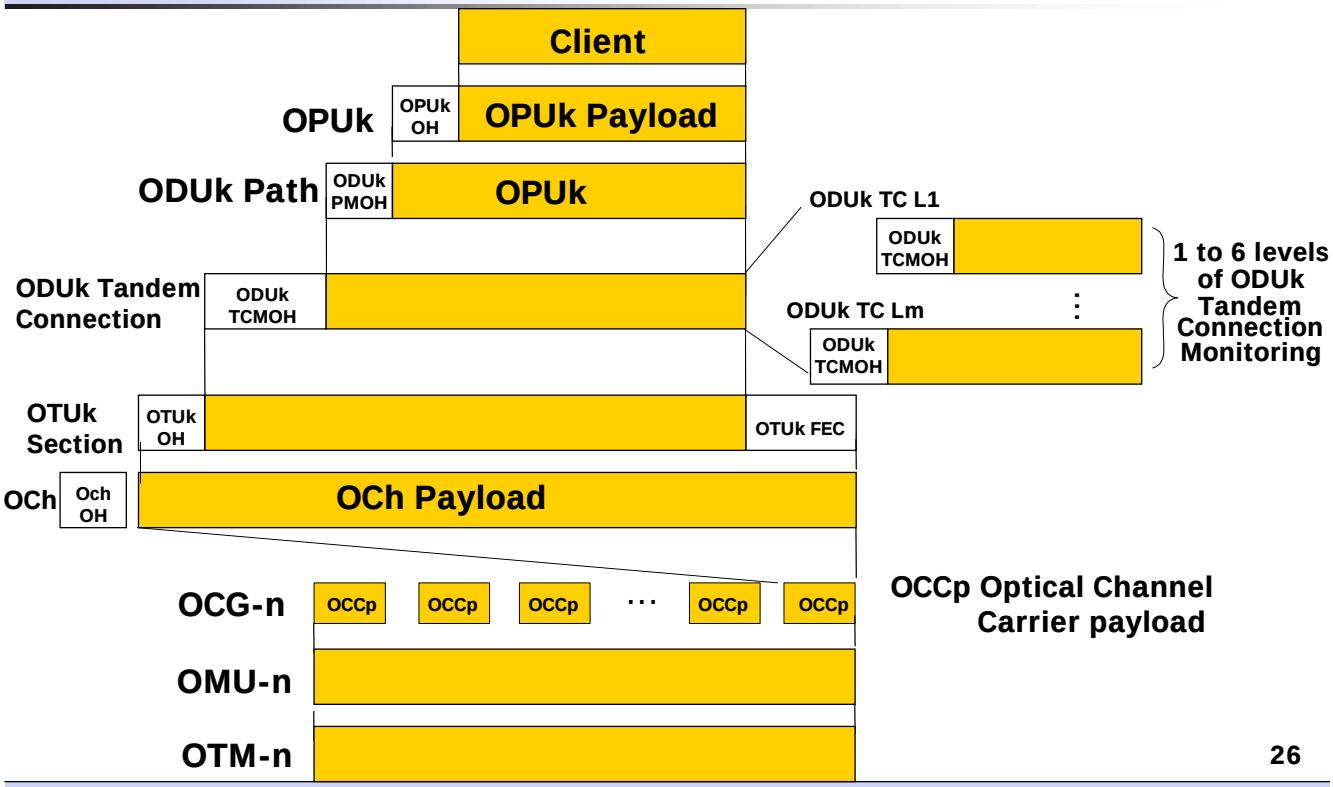

G.709/Y.1331 – OTM Multiplexing and Mapping Structures

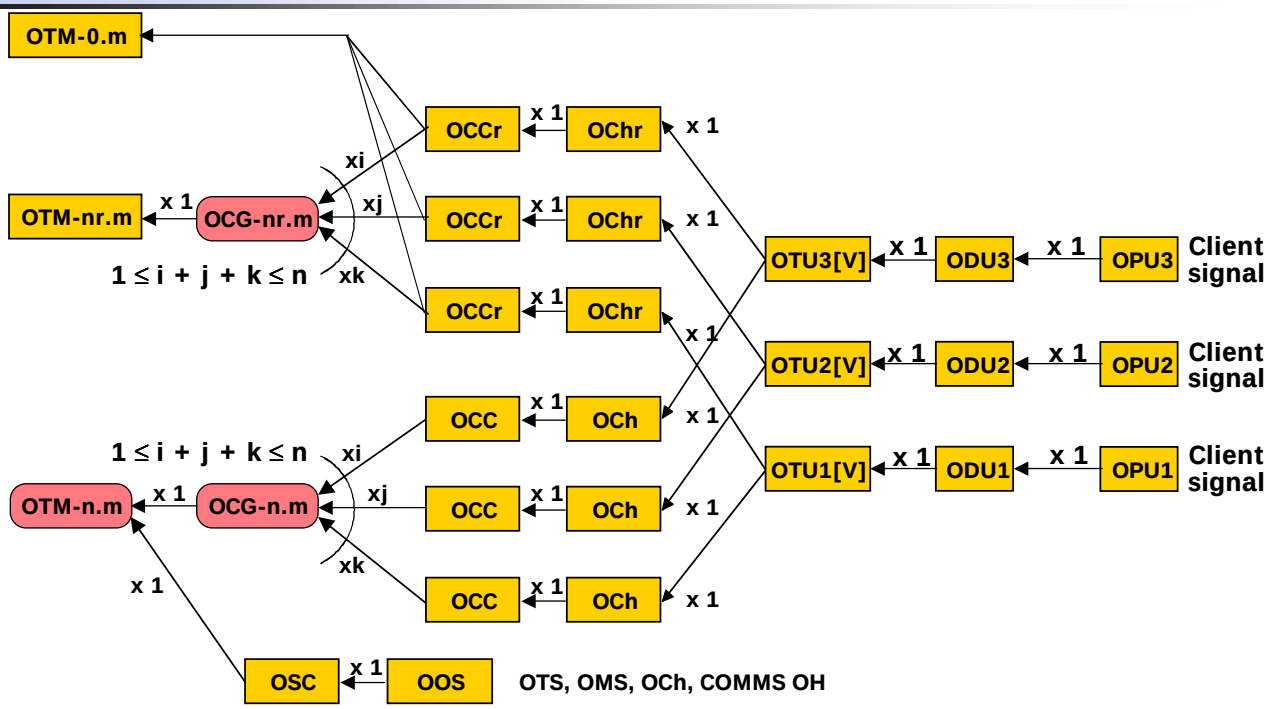

ASON Control Plane

- Limitations of existing networks
- Control plane benefits
- Definition of ASON
- ASON transport plane
- *ASON control plane*
- ASON management plane
- Implementation issues
- Open issues and perspectives

Logical View of ASON Architecture

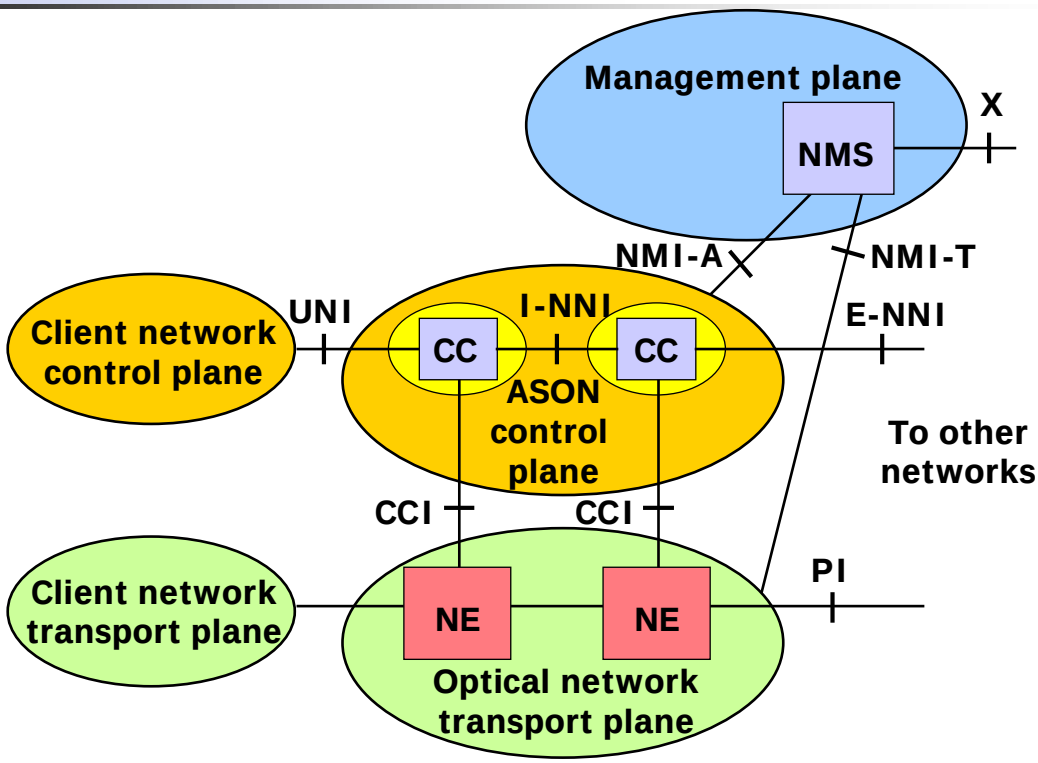

Relationships and Interfaces Between ASTN Entities

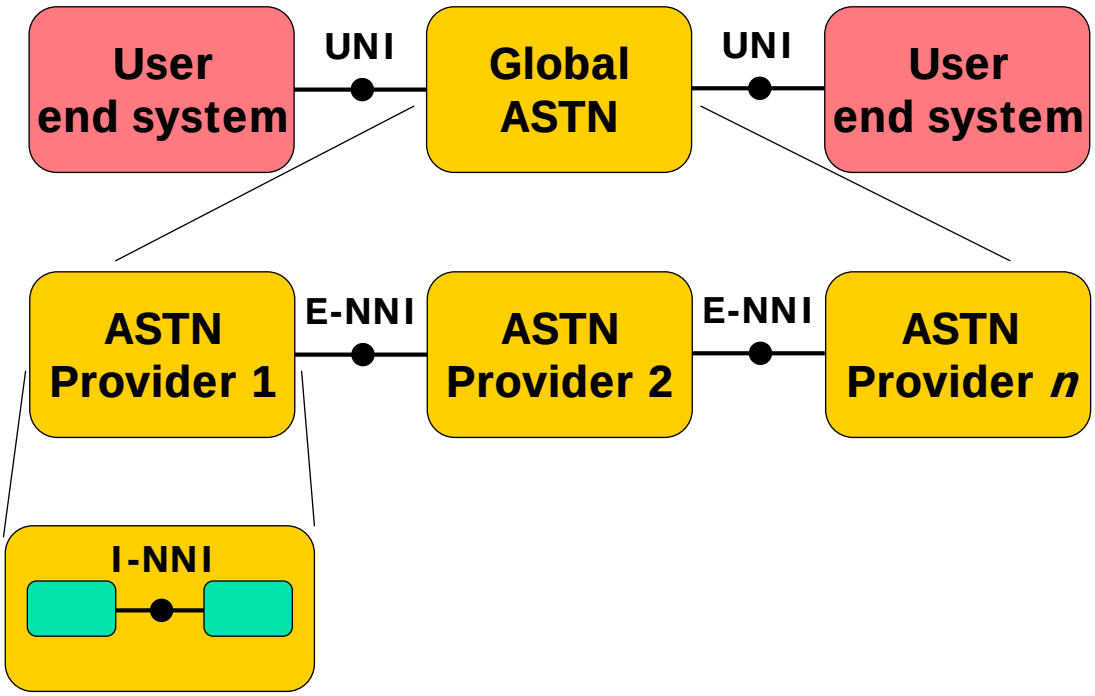

ITU-T: G.807

ASON Signalling Requirements

- **Separation between control and bearer**
  - **Unlike a traditional IP network, ASON cannot use the state of the bearer to infer any useful information about the health of the control channel**
  - **Bearer connections must not be disrupted as a result of control channel failure**
- **Call and connection control separation**
  - **Support of multiple connections associated with the same call**
  - **Useful to differentiate between call parameters and connection parameters**
  - **Useful to define "call/bearer coordination points" that usually reside at the network boundaries (at UNI and E-NNI)**

Signalling Options in ASON

- **GMPLS CR-LDP**
  (Constrained Routing – Label Distribution Protocol)
- **GMPLS RSVP-TE**
  (Resource ReSerVation Protocol – Traffic Engineering)
- **PNNI/Q.2931**
  (Private Network to Network Interface)
- **and others**

ASON Management Plane

- Limitations of existing networks
- Control plane benefits
- Definition of ASON
- ASON transport plane
- ASON control plane
- *ASON management plane*
- Implementation issues
- Open issues and perspectives

Management Plane

- The management plane performs management functions for the transport plane, the control plane and the system as a whole. It also provides coordination between all the planes.
- Management functional areas (as in M.3010):
  - Performance management
  - Fault management
  - Configuration management
  - Accounting management
  - Security management

Challenges in ASON Management

- **Concurrency between control plane and management plane**
  (Possible conflict avoidance)
- **Coexistence of control plane and ASON features**
  (e.g., coexistence of permanent connections with soft-permanent connections)
- **Migration, from management point of view, from classical transport networks to ASON**

Source: LION project

Management capabilities that may impact interactions between management and control planes (1)

- **Creation and deletion of a connection**
- **Division of network resources between those visible to the control plane and those visible to the management plane**
- **Assignment of capacity to a particular player to create private networks**
- **Assignment of unique identifiers to CTPs and creation of a binding between the CTP and its associated SNPs**
- **Provision of configuration and policy information to the address screening and closed user groups functions, if either are present in the control plane**

ITU-T: G.8080

Management capabilities that may impact interactions between management and control planes (2)

- Setting and modification of the signalling system parameters, such as time-outs, thresholds, congestion control mechanisms, maximum number of allowed connections, maximum signalling load
- In the event of routing occurring in the management plane (centralized):
  - Calculation of the route for permanent connections and use of management protocols for connection management
  - Calculation of the route for soft permanent connections and providing the control plane with an explicit route

Management capabilities that may impact interactions between management and control planes (3)

- Measurement of call performance. The parameters may include:
  - Call request rates
  - Circuit utilization
  - Call holding time
  - Holding times
  - Statistical averages computed across the total number of connection requests over a period of time
- Management of call admission control
- Determination of the maximum number of connections that can be supported by a network element and to set, where appropriate, the maximum number to be supported

Management capabilities that may impact interactions between management and control planes (4)

- Distinguishing changes in the state of connections due to management or control plane actions and those resulting from network failures and suppress or generate alarms as appropriate
- Setting or modifying survivability priority levels or quality of service contract levels for all connections associated with a given 'performance class'
- Assigning the maximum value of a connection identifier on a link where appropriate, setting traffic management controls

Management capabilities that may impact interactions between management and control planes (5)

- Activation or deactivation of 'direct routing and alternate routing'
- Support for temporary re-routing schemes
- Management of the signalling network to ensure a consistent configuration of signalling resources
- Determination of attributes of signalling links including their functional status, error indications, traffic data or maximum bandwidth

Implementation Issues

- Limitations of existing networks
- Control plane benefits
- Definition of ASON
- ASON transport plane
- ASON control plane
- ASON management plane
- *Implementation issues*
- Open issues and perspectives

Features of Recovery Mechanisms in ASON

- Independence and support of any client type (e.g., IP, ATM, SDH, Ethernet)
- Scalability to accommodate a catastrophic failure in a server layer, such as fibre cable cut
- Utilization of a robust and efficient signalling mechanisms, which remain functional even after a failure in the transport or signalling network
- Independence of functions which are non-time critical to initiate protection or restoration actions (recovery schemes should not depend on fault localization)

ITU-T: G.8080

Support for Transport Network Survivability in ASTN

- Survivability can be controlled by the ASTN control plane or by transport network mechanisms that are independent of the control plane
- Survivability can be achieved by means of protection or restoration
- User requests for explicit survivability mechanisms (e.g., 1:1, 1+1, ring, mesh protection, etc.) are not supported as the user should not have access to the topology of the provider network
- User may request from the provider diverse connections

ITU-T: G.807

ASON Related Standards (ITU-T)

- Architecture and requirements
  - G.8080/Y.1304, Architecture for the automatically switched optical network (ASON)
  - G.8080/Y.1304, Amd. 1, Architecture for the automatically switched optical network (ASON), Amendment 1, 03/2003
  - G.807/Y.1302, Requirements for automatic switched transport networks (ASTN)

ASON Related Standards (ITU-T)

- Call and connection management
  - G.7713/Y.1704, Distributed call and connection management (DCM)
  - G.7713.1/Y.1704.1, DCM signalling mechanism using PNNI/Q.2931
  - G.7713.2/Y.1704.2, DCM signalling mechanism using GMPLS RSVP-TE
  - G.7713.3/Y.1704.3, DCM signalling mechanism using GMPLS CR-LDP

ASON Related Standards (ITU-T)

- Discovery and link management
  - G.7714/Y.1705, Generalized automatic discovery techniques
  - G.7714.1/Y.1705.1, Protocol for automatic discovery in SDH and OTN networks, 04/2003
  - G.7715/Y.1706, Architecture and requirements of routing for automatic switched transport network
  - G.7716/Y.1707, Architecture and requirements of link resource management for automatic switched transport networks
  - G.7717/Y.1708, ASTN connection admission control
- And others

ASON Related Documents (IETF)

- O. Aboul-Magd *et al.*, Automatic Switched Optical Network (ASON) Architecture and Its Related Protocols, *Internet Draft*, March 2002 (work in progress)
- W. Alanqar *et al.*, Requirements for Generalized MPLS (GMPLS) Routing for Automatically Switched Optical Network (ASON), *Internet Draft*, May 2004 (work in progress)
- D. Papadimitriou *et al.*, Requirements for Generalized MPLS (GMPLS) Signaling Usage and Extensions for Automatically Switched Optical Network (ASON), *Internet Draft*, April 2004 (work in progress)
- And others

Optical Internetworking Forum (OIF)

- *User Network Interface (UNI) 1.0 Signaling Specification*, Implementation Agreement OIF-UNI-01.0, October, 2001

Possible Deployment Scenarios (1)

- Integration with legacy systems and incomplete new systems
- Allocation of functions between control plane and management plane
  - Only routing and link management done via management plane
  - Routing and link management, call processing, and connection processing all via control plane

Source: W. Alanqar, T. Ferris

Possible Deployment Scenarios (2)

- Mix of switched and not switched within different transport network layers
  - Client layer switched and server layer not switched
  - Server layer switched and client layer not switched
- Mix of switched and not switched within transport network partitions
  - UNI, E-NNI, I-NNI, sub-networks
- Combinations of the above

Source: W. Alanqar, T. Ferris

Possible Deployment Scenarios

Integration with legacy systems and incomplete new systems

- **Management based solution with in-house development**
  - Carrier-specific control plane
  - Expensive to maintain under dynamic market business requirements
  - Integration scope is broader (multiple complex interfaces required)

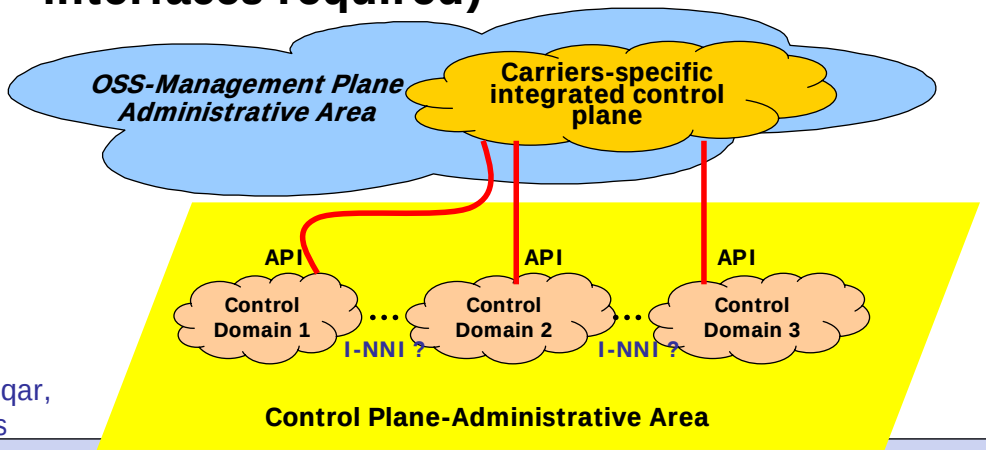

Source:
W. Alanqar,
T. Ferris

Possible Deployment Scenarios

Integration with legacy systems and incomplete new systems

- **Provision of a thin layer above multiple vendor control domains**
  - Carrier-independent control plane
  - Less expensive to maintain under dynamic market business requirements
  - Integration scope is narrower (control-management interface required)

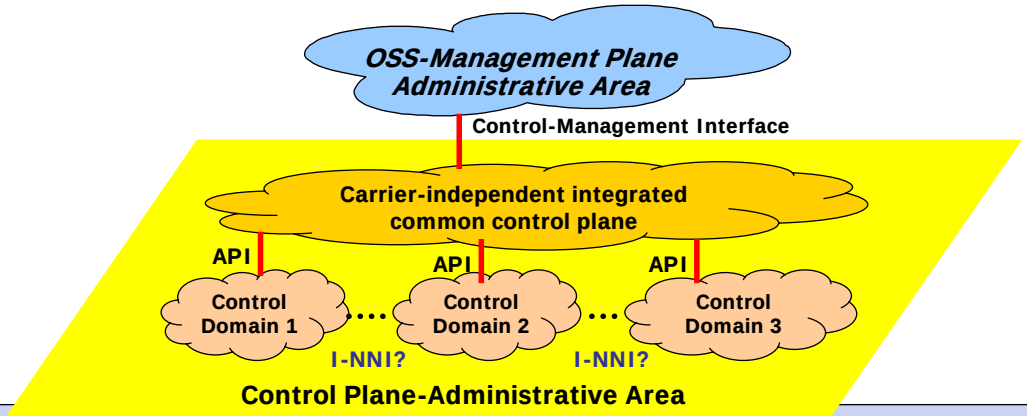

Source:
W. Alanqar,
T. Ferris

Possible Deployment Scenarios

Mix of ASTN and not ASTN within transport network partitions

- **One domain ASTN, another domain not ASTN**

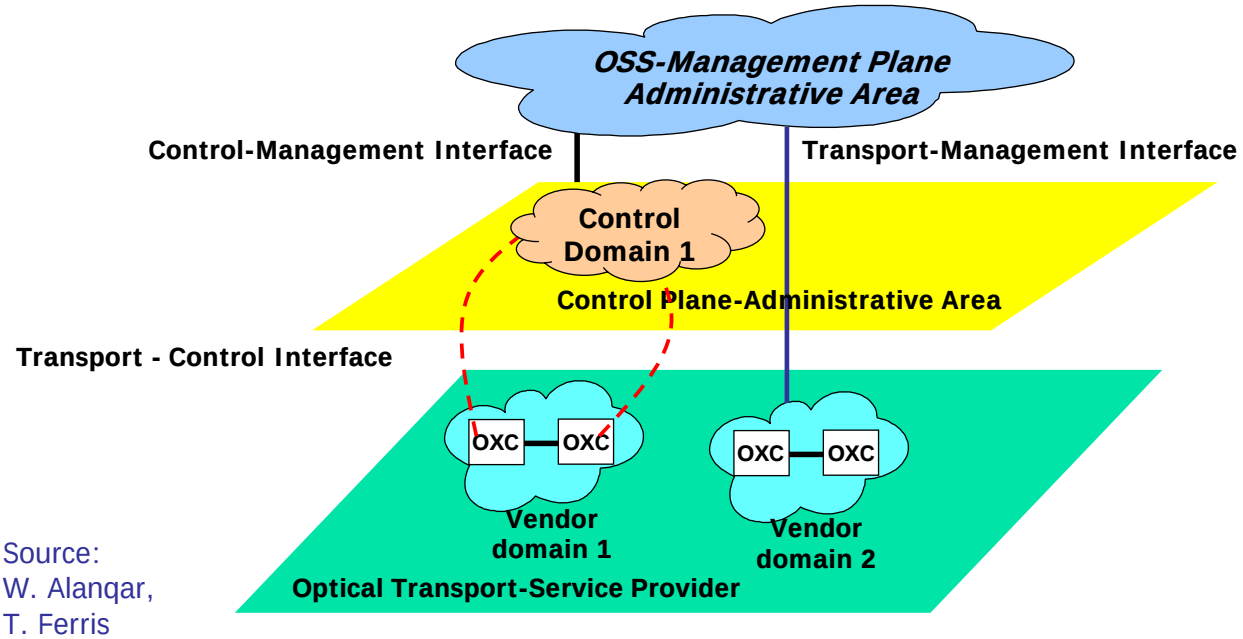

Source:
W. Alanqar,
T. Ferris

Possible Deployment Scenarios

Mix of ASON and not ASON within transport network partitions

- **E-NNI supported as interface to other providers, but not fully automatically switched within provider net.**
  - **Control and management planes need to collaborate for E-NNI requested connections**
  - **Routing and link management is done by the mngmt. plane**
  - **E-NNI call / connection processing is done by the control plane**

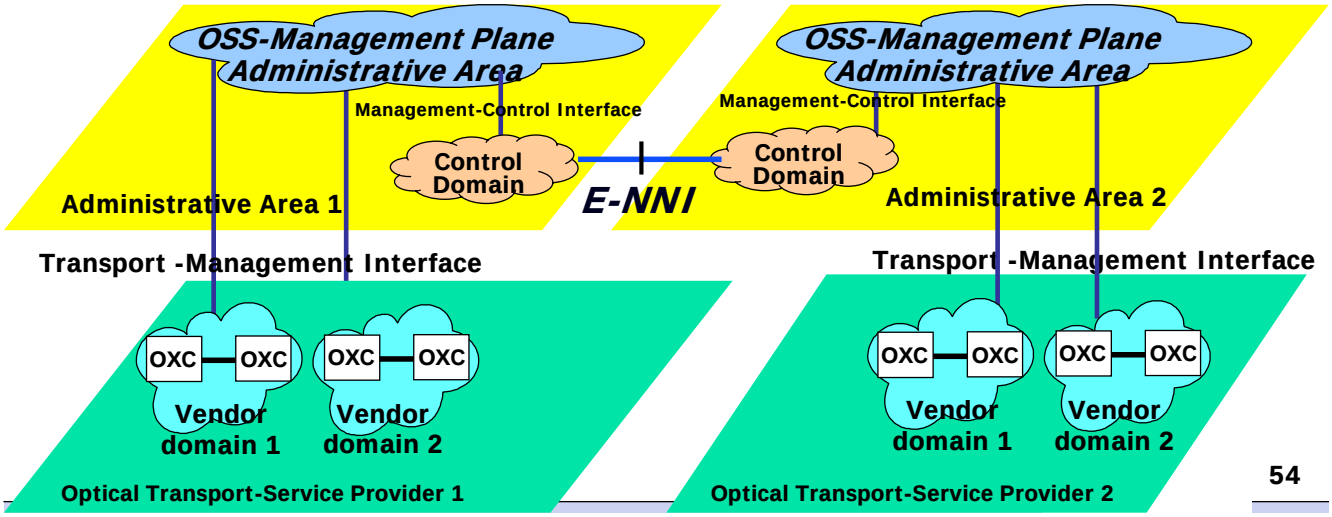

Open Issues and Perspectives

- Limitations of existing networks
- Control plane benefits
- Definition of ASON
- ASON transport plane
- ASON control plane
- ASON management plane
- Implementation issues
- *Open issues and perspectives*

ASON Open Issues and Future Research Areas (1)

- Automatic switching
  - Routing optimality with long holding time connections
    - *Grooming of existing connections*
    - *Large overhead of message processing when little or no changes to network*
- Administration
  - Role of control plane vs management plane
    - *Alarm filtering and root cause analysis and fault isolation*
    - *Data replication and synchronization*

Source: W. Alanqar, T. Ferris

ASON Open Issues and Future Research Areas (2)

- Resiliency
  - Signalling, routing, and link management message storms
  - Detection of dropped calls
  - Monitoring call performance when connections are a moving target
- Security
  - Keeping the ASON DCN secure
- Other supporting functions
  - Communicating discovery processes need to be managed and scaleable
  - Must accept input when no automatic discovery between peers

Source: W. Alanqar, T. Ferris

Conclusion

- ASON is a client-independent optical transport network able to provide automatically switched optical channels
- ASON offers enhanced support of packet services (e.g., IP, ATM, FR)
- ASON improves 'provisioning speed' over management systems
- In ASON available network capacity can be more efficiently utilized

Biography of the Lecturer

Andrzej Jajszczyk is a Professor at the AGH University of Science and Technology in Krakow, Poland. He received M.S., Ph.D., and Dr Hab. degrees from Poznan University of Technology in 1974, 1979 and 1986, respectively. He spent a year at the University of Adelaide in Australia and two years at Queen's University in Kingston, Ontario, Canada as a visiting scientist. He is the author or co-author of six books and over 180 scientific papers, as well as 19 patents in the areas of telecommunications switching, high-speed networking, and network management. He has served as a Consultant to telecommunications industry, operators, and government agencies in Australia, Canada, France, Germany, Poland, and USA. He was the founding editor of the *IEEE Global Communications Newsletter* and editor for *IEEE Transactions on Communications*. From 1998 to 2000 he was the Editor-in-Chief of *IEEE Communications Magazine*. Currently, he is the Director of Magazines of IEEE Communications Society. He is a Fellow member of IEEE and an IEEE Communications Society Distinguished Lecturer.